ROHS

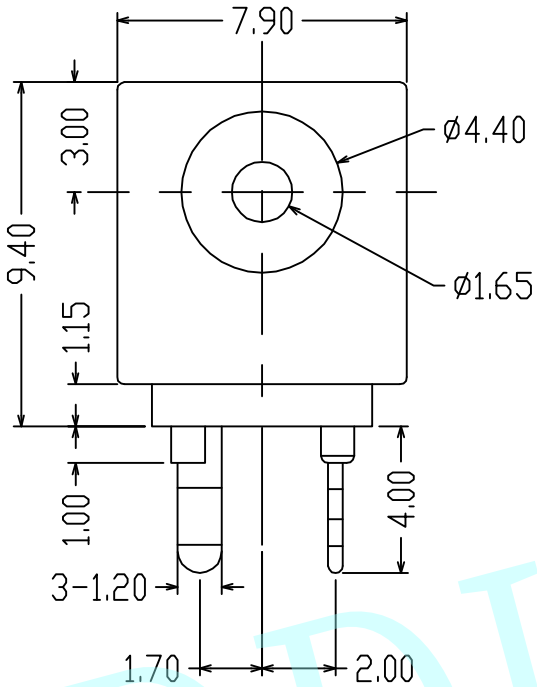

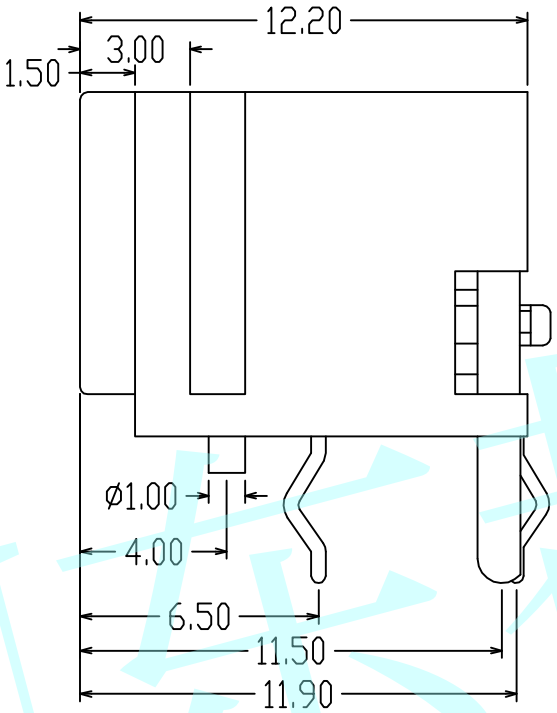

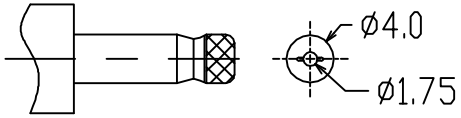

DC MATE PLUG

DC-028-A

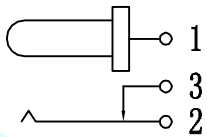

CIRCUIT DIAGRAM

DC-028-B

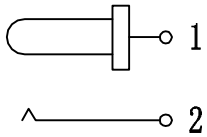

CIRCUIT DIAGRAM

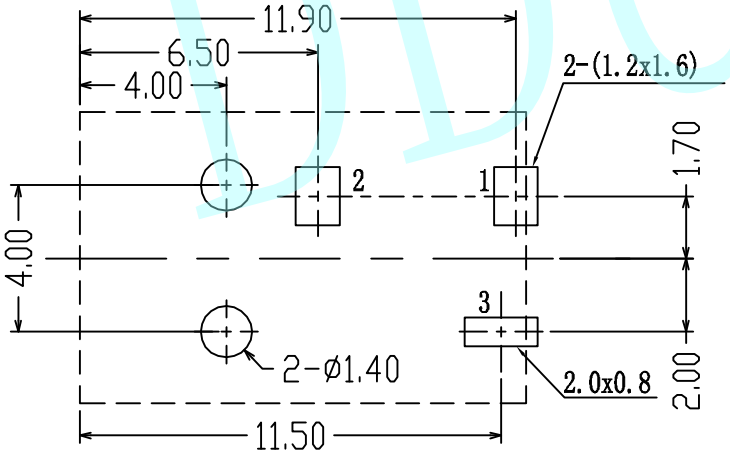

PCB Layout (Copper-Side View)

NOTES:

1. Rating:0.5A 30V DC
2. Contact Resistance:100mΩ Max
3. Operating temperature:-20℃~70℃
4. Operating force:3-20N
5. Operating Life:5,000cycles

APPROVALS		DATE	http://www.dongdudz.com		
DRAW:	ZRD	2017-12-6	TOLERANCE:		ANGLE:
CHECKED:	***	***	30≥	±0.30	±2°
APPOVALS:	***	***	10~30	±0.20	
			5~10	±0.15	
			≤5	±0.10	

® 东都电子
DONGDU ELECTRONICS

MODEL:	DC POWER JACK	
PART NO:	DC-028	
UNIT :mm	SCALE:1:1	
REV:	A	PAGE:1/1

DDU东都