ROHS

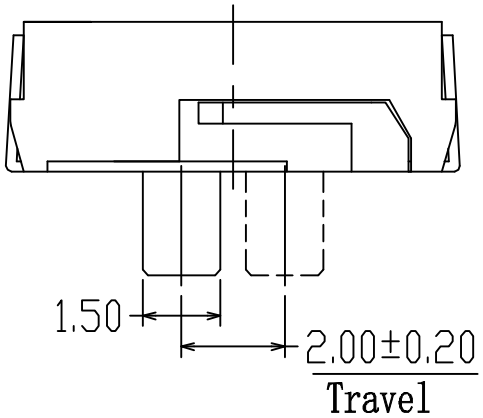

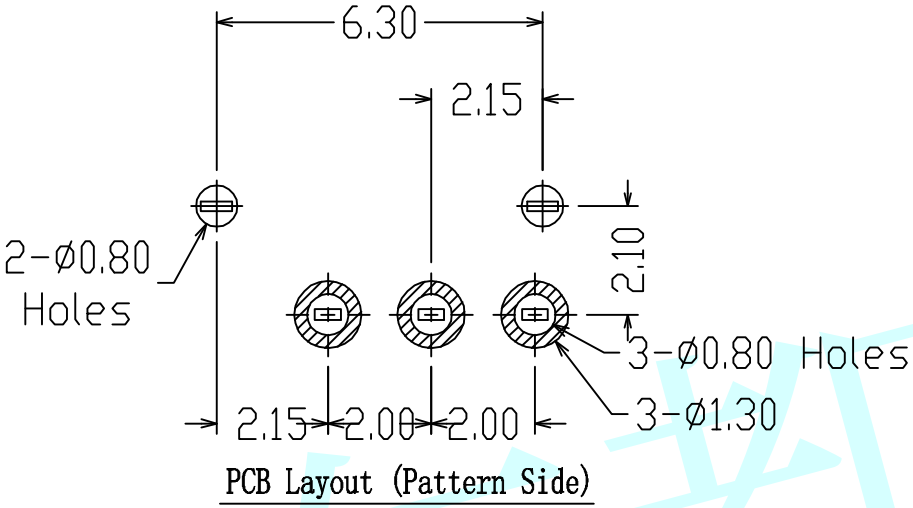

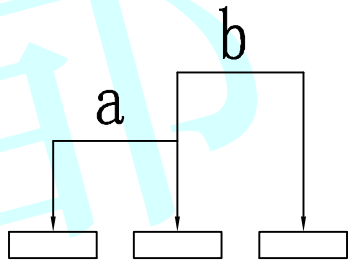

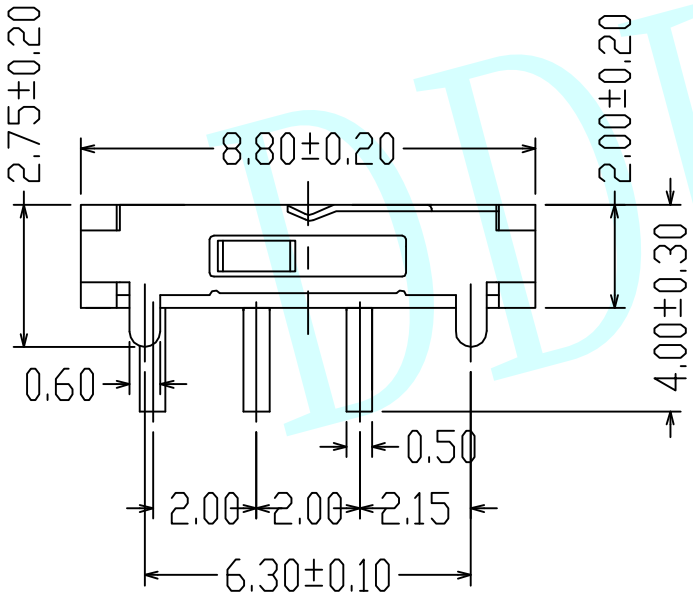

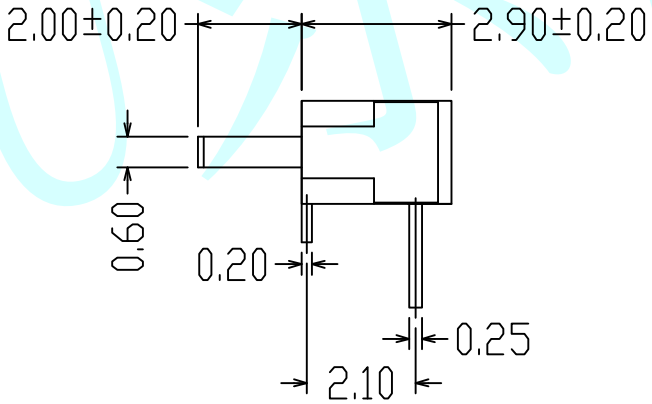

NOTES:

1. Operating Force :120±50gf

APPROVALS		DATE	http://www.dongdudz.com		
DRAW:	ZRD	2017-12-6	TOLERANCE:		ANGLE:
CHECKED:	***	***	30≥	±0.30	±2°
APPOVALS:	***	***	10~30	±0.20	
			5~10	±0.15	
			≤5	±0.10	

® 东都电子
DONGDU ELECTRONICS

MODEL:	TOGGLE SWITCHES	
PART NO:	DDU-1449	
UNIT :mm	SCALE:1:1	
REV:	A	PAGE:1/1

DDU东都