ROHS

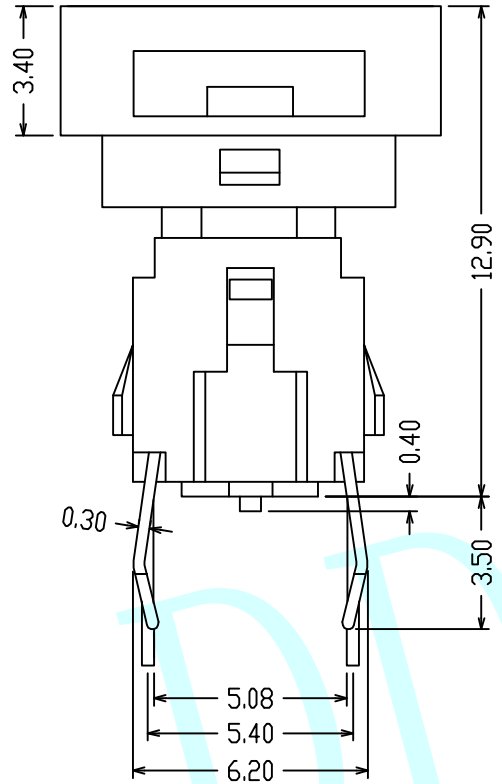

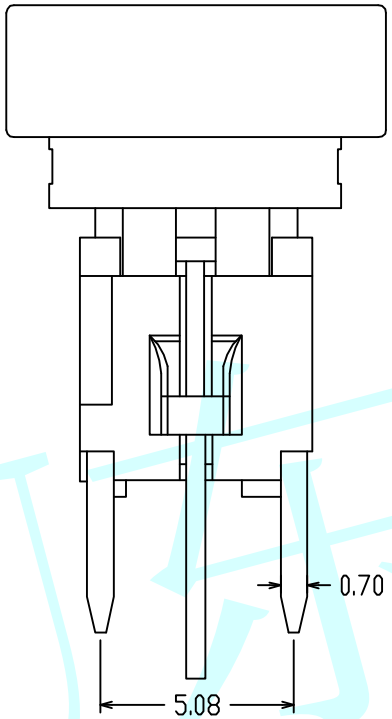

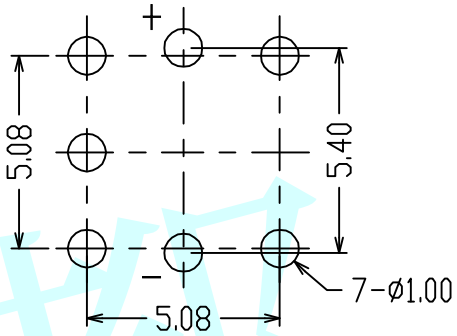

PCB Layout(Pattern Side)

NOTES:

1. Rating:12V DC 50mA
2. Contact Resistance:100mΩ Max
3. Insulation Resistance:100MΩ 250V DC FOR 1MIN
4. Dielectric Strength:250V AC(50/60Hz) FOR 1MIN
5. Life Test:200,000 Cycles
6. Operation Force:160±50gf
7. Travel:0.25±0.10mm

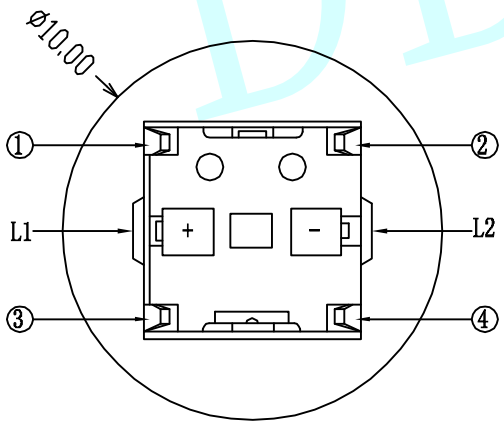

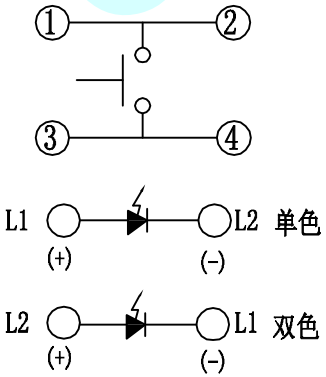

Circuit Diagram

ITEM	PART NAME	MATERIAL
8	Lucency cap	ABS&pc
7	LINING	ABS&pc
6	COVER	ABS&pc
5	TERMINAL	Bronze Silver Plated
4	CONTACT	SUS
3	LED	GaAsP/GaP
2	BUTTON	PA66
1	HOUSING	PA66

LED Colour(LED颜色)	Whiler(白色)	Red(红色)	Blue(蓝色)	Green(绿色)

APPROVALS		DATE
DRAW:	ZRD	2017-12-6
CHECKED:	***	****
APPOVALS:	***	****

http://www.dongdudz.com

TOLERANCE:		ANGLE:
30≥	±0.30	±2°
10~30	±0.20	
5~10	±0.15	
≤5	±0.10	

® 东都电子
DONGDU ELECTRONICS

MODEL:	LED Tact Switch	
PART NO:	DDU-2023	
UNIT :mm	SCALE:1:1	
REV:	A	PAGE:1/1

DDU东都